TYPE	YEAR	PROJECT NO.	SHEET NO.
RESURF.	2015	STP-NH/HSIP-4(10)	3

TYPICAL SECTION

DETAIL OF BREAKOUT

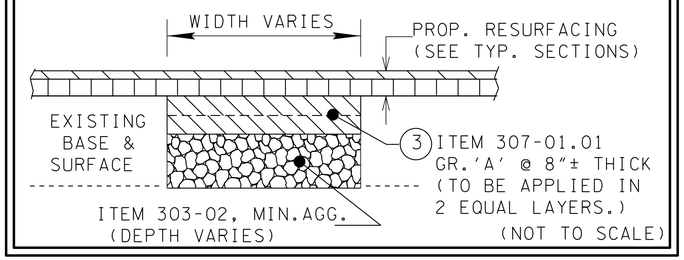

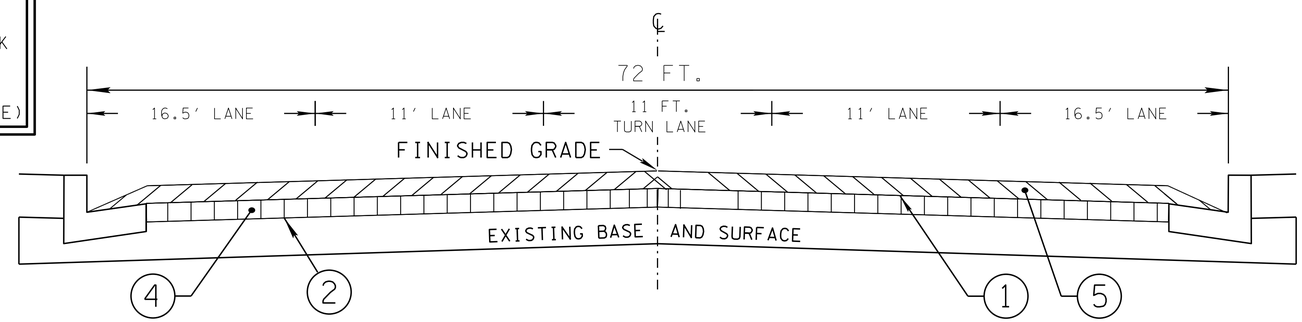

FROM: L.M. 7.68 TO L.M. 8.70

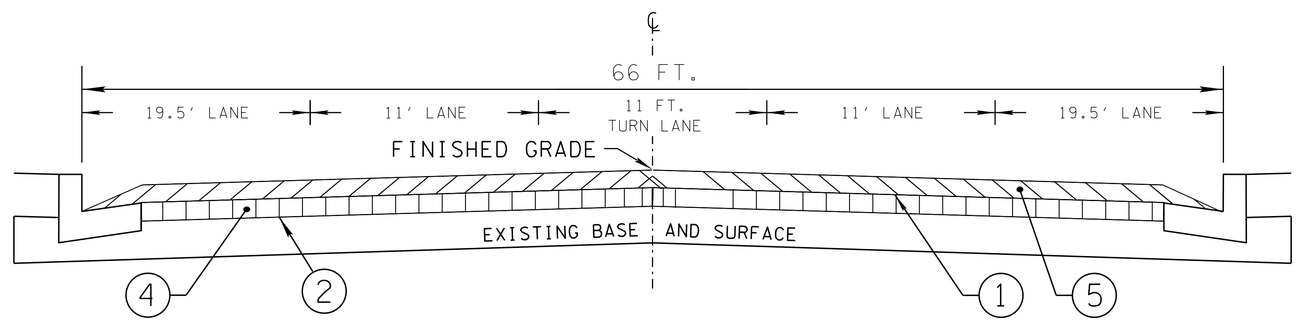

FROM: L.M. 8.70 TO L.M. 9.87

PROPOSED PAVEMENT SCHEDULE

1. TACK COAT (TC)
   ITEM 403-01 BITUMINOUS MATERIAL FOR TACK COAT (TC) (AT 0.10 GAL./S.Y.)
2. COLD PLANING @ 2.00"± THICK (APPROX. 105.00 LBS./S.Y.)
   ITEM 415-01.01 COLD PLANING BITUMINOUS PAVEMENT
3. BITUMINOUS BASE COURSE (BLACK BASE) @ 8"± THICK (APPROX. 920.00 LBS./S.Y.)
   ITEM 307-01.01 ASPHALT CONCRETE MIX (PG64-22)(BPMB-HM) GRADING "A"
   (THIS ITEM IS TO BE USED FOR BREAKOUT ONLY)
4. ASPHALTIC CONCRETE SURFACE (ACS) @ 1.25"± THICK (APPROX. 132.50 LBS./S.Y.)
   ITEM 411-03.10 ACS MIX (PG76-22)GRADING "D"
5. ASPHALTIC CONCRETE SURFACE (ACS) @ 0.4"± THICK (APPROX. 46.00 LBS./S.Y.)
   ITEM 411-03.09 ACS MIX (PG76-22) THIN LIFT CS ASPHALT

SEALED BY

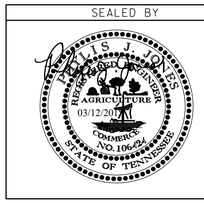

STATE OF TENNESSEE
DEPARTMENT OF TRANSPORTATION

TYPICAL SECTIONS

(NOT TO SCALE)

3-MAR-2015 14:06
\\j04wf01.tdot.state.tn.us\04SHARED\Design\DESIGN\DESIGNKG\RESURFACING PROJECTS\Shelby\SR-4\LM7-48LM9-87\79004LM7-48 BLANK TYPICAL.dgn